3460ASMJ-HP-AIS
TAPPING SLEEVE ALL STAINLESS
Certified to NSF/ANSI-61

Scope

The intent of this specification is to receive a high pressure rated High Pressure Stainless Steel Tapping Sleeve. The Tapping Sleeve furnished shall be equivalent to Model 3460ASMJ-HP-AIS Tapping Sleeve as manufactured by PowerSeal Pipeline Products Corporation.

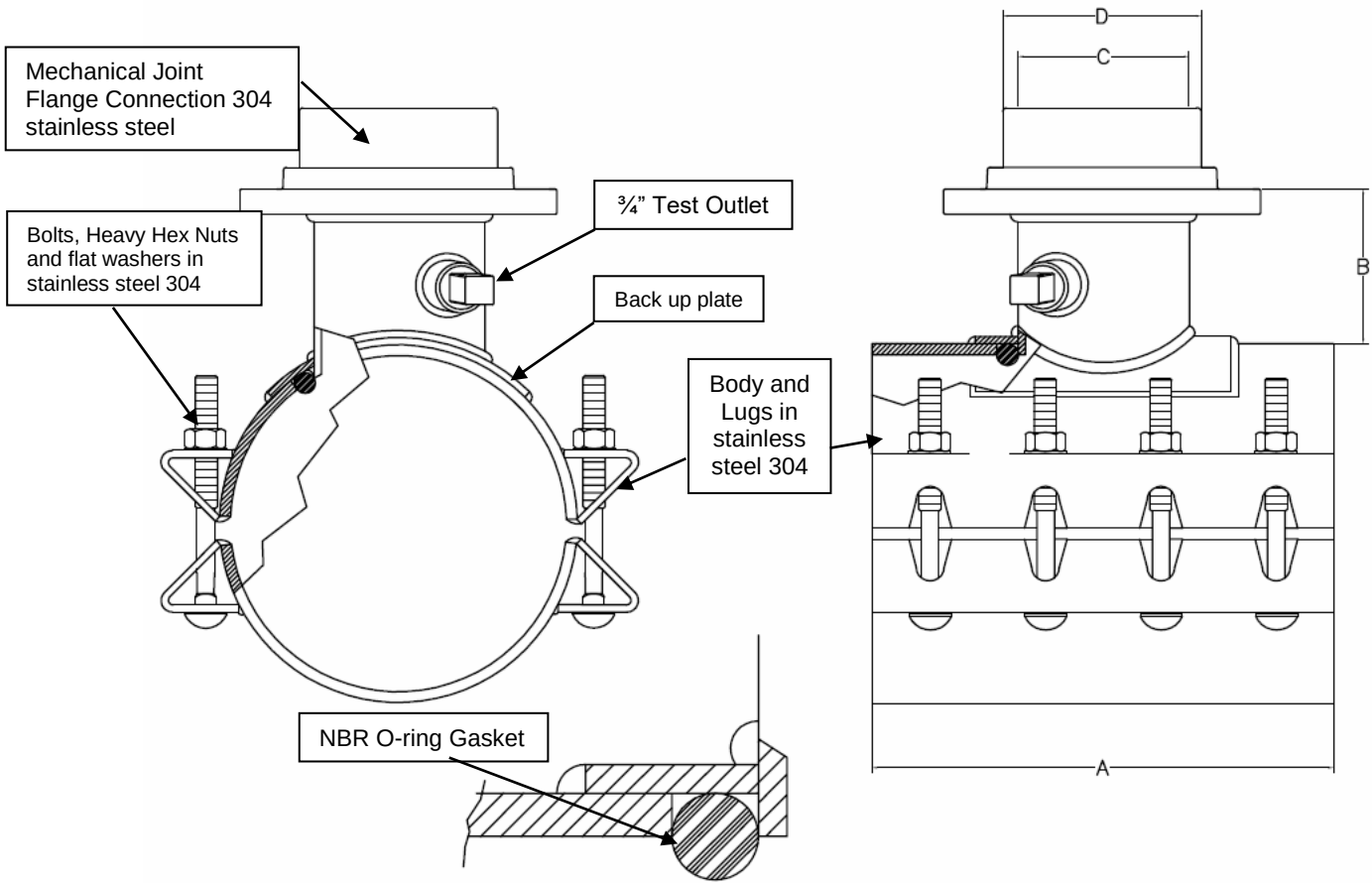

Branch Size	A (in)	B (in)	C (in)	D (in)	Bolts Size	Bolts Qty	Working Pressure (PSI)	Test Pressure (PSI)
4	12	5.58	4.375	9.00	¾"	6	250	312
6	12	5.96	6.375	11.00	¾"	6	250	312
8	16	6.14	8.375	13.50	¾"	8	250	312
10	20	6.64	10.375	16.00	¾"	10	200	300
12	20	6.64	12.375	19.00	¾"	10	200	300
For all pipe 30 inch and up the working pressure is 100PSI regardless of branch size.								

Features and Benefits

1. The complete tapping sleeve is made from stainless steel type 304 or 316, and all the welding shall be passivated so as to return the welded stainless steel to its original corrosion resistant state.
2. The tapping sleeve shall be rated for a minimum working pressure of 250 psi for nominal sizes up through and including 24 x 8.

The tapping sleeve shall be factory hydrostatically tested on pipe to verify proper fit and weld integrity. The duration of the test shall be a minimum of three (3) minutes with zero leakage allowed. **The Tapping Sleeve shall be rated for a maximum working pressure of 250 psi and 312 psi testing pressure for outlet sizes 4" to 8". For outlet sizes 10" and 12" a maximum working pressure 200 psi and 300 psi testing pressure. For pipe sizes larger than 30" a maximum working pressure up to 100 psi and 150 psi testing pressure.**

3. Built in range allows reduction of inventory.
4. "Drop-in" track head bolts allow assembly in either direction.
5. Meets AIS requirements

Design and Material Specification

- The tapping sleeve shall meet or exceed all material specifications as listed below:

1. The sleeve meets all AWWA C223 requirements.
2. The tapping sleeve shall have a flange face gasket and a branch sealing o-ring gasket all permanently attached to the sleeve at the factory.
   The branch sealing gasket shall be an o-ring in NBR (-25F° - +248F°) rubber. The flange face gasket shall be SBR (-25F° - +200F°).
3. The tapping sleeve shall incorporate drop-in, oval-neck track-head bolts in stainless steel.
4. The branch shall be a minimum of 3/8" larger diameter than nominal to allow the use of a full size cutter.
5. Branch to flange and branch to shell connections are double welded. Outer structural weld GMAW (FCAW) and inner fusion weld GTAW (TIG).

6. Lugs shall be structurally welded GMAW (FCAW) to the shell and the test outlet shall be fusion welded GTAW (TIG) to the branch.
7. There shall be no paper or plastic adhesive labels on the tapping sleeve.
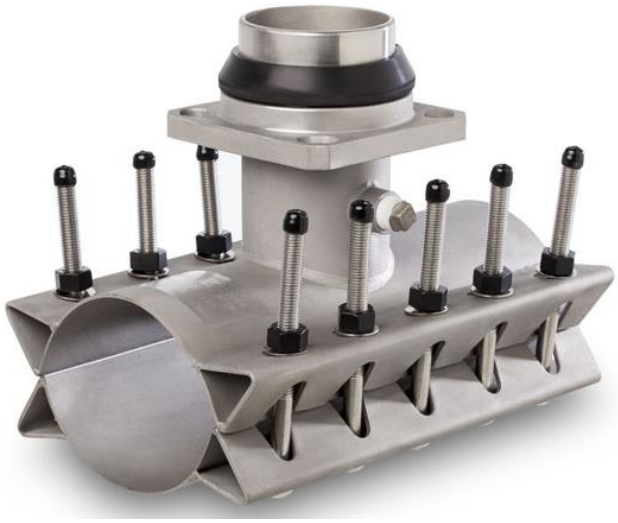
Material Specifications		
Part Name	**Material**	**Mat. specs**
Mechanical Joint Flange	304 Stainless Steel	AWWA C115
MJ Gasket	SBR	AWWA C115AP
Branch	304 Stainless Steel	ASTM A240
Test Plug	304 Stainless Steel	ANSI B2.1
Shell	304 Stainless Steel	ASTM A240
Bolt Lug	304 Stainless Steel	ASTM A240
Branch O-ring	NBR	ASTM D2000
Bolts	304 Stainless Steel	ASTM A193
Nuts	304 Stainless Steel	ASTM A194
Washers	304 Stainless Steel	ANSI B18.22.1
Back up plate	304 Stainless Steel	ASTM A240