3528 Fabricated Flanged Coupling Adapter
Steel pipe sizes 4" - 48"

BILL OF MATERIALS				
ITEM	QTY	PART NUMBER	MATERIAL	MATERIAL SPEC
1	1	Barrel	Carbon steel	ASTM A36
2	1	Gasket	NBR	ASTM D2000
3	1	Gland	Carbon steel	ASTM A36
4	1	Class D Flange	Carbon steel	AWWA C207
5	*	Bolts	Low alloy bolts/304-316 Stainless steel	ASTM A325/ASTM A193
6	*	Heavy Hex Nuts	Low alloy bolts/ 304-316 Stainless steel	ASTM A536/ ASTM A194

Coating: Epoxy paint

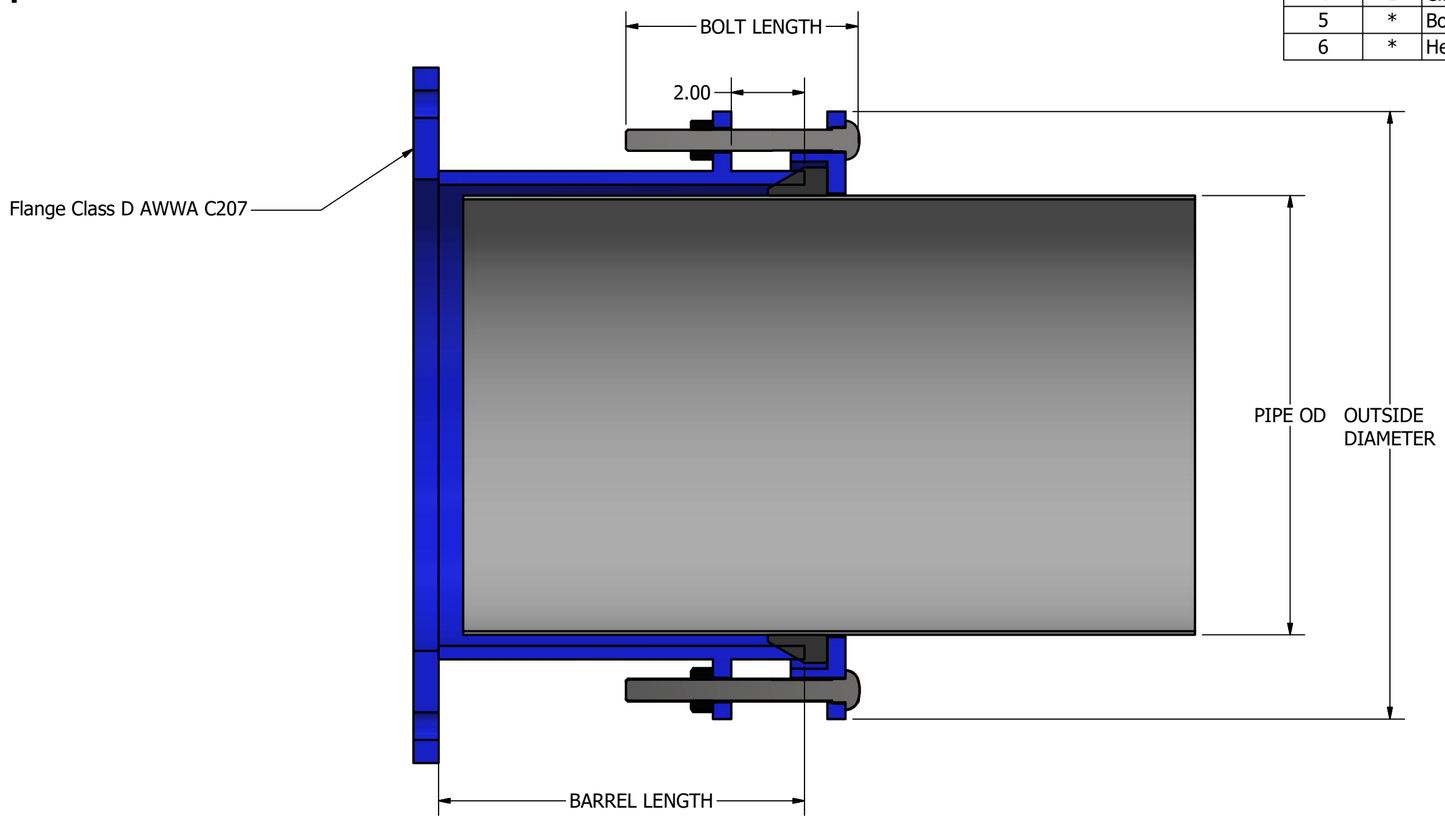

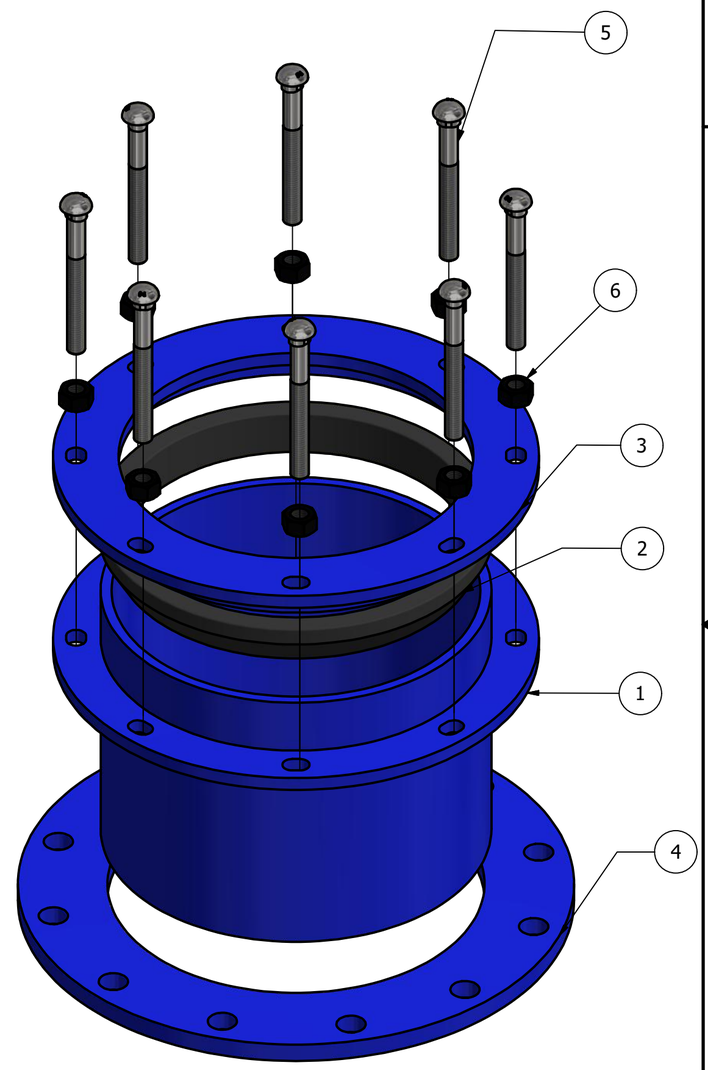

PIPE OD	Barrel length	Barrel thickness	Bolt size/ length	Bolt qty	Outside diameter	Class D AWWA C207 Flange OD	Flange thickness	Flange bolt holes QTY	Flange bolt holes size	Flange bolt holes B.C
4.50	10.00 in	1/4"	5/8" x 4.5	4	9.10 in	9.00 in	0.625"	8	0.750	7.50 in
6.63	10.00 in	1/4"	5/8" x 4.5	5	11.23 in	11.00 in	0.688"	8	0.875	9.50 in
8.63	10.00 in	3/8"	5/8" x 4.5	6	13.23 in	13.50 in	0.688"	8	0.875	11.75 in
10.75	10.00 in	3/8"	5/8" x 4.5	7	15.35 in	16.00 in	0.688"	12	1.000	14.25 in
12.75	10.00 in	3/8"	5/8" x 4.5	8	17.35 in	19.00 in	0.812"	12	1.000	17.00 in
14.00	10.00 in	3/8"	5/8" x 4.5	9	18.60 in	21.00 in	0.938"	12	1.125	18.75 in
16.00	10.00 in	3/8"	3/4" x 4.5	10	20.60 in	23.50 in	1.000"	16	1.125	21.25 in
18.00	10.00 in	3/8"	3/4" x 4.5	12	22.60 in	25.00 in	1.062"	16	1.125	22.75 in
20.00	10.00 in	3/8"	3/4" x 4.5	12	24.60 in	27.50 in	1.125"	20	1.125	25.00 in
24.00	10.00 in	3/8"	3/4" x 4.5	14	28.60 in	32.00 in	1.250"	20	1.375	29.50 in
30.00	10.00 in	3/8"	3/4" x 4.5	16	34.60 in	38.75 in	1.375"	28	1.375	36.00 in
36.00	10.00 in	3/8"	3/4" x 4.5	16	40.61 in	46.00 in	1.625"	32	1.625	42.75 in
42.00	10.00 in	3/8"	3/4" x 4.5	18	46.61 in	53.00 in	1.750"	36	1.625	49.50 in
48.00	10.00 in	3/8"	3/4" x 4.5	20	52.61 in	59.50 in	1.875"	44	1.625	56.00 in

Unless otherwise stated all dimensions are in inches.
Flexible couplings do not provide against pull out of pipe
*Meets the provisions of ANSI /AWWA C219-91 Coupling standard for plain end pipe

CUSTOMER INFO

Company name: _____
Contact: _____ Tel # _____
Notes: _____
_____
_____

PRODUCTION RELEASE

☐ Approved as submitted hereon

☐ Approved as noted and revised hereon

☐ REJECTED _____

Release authorized by _____
Release Date _____ P.O. # _____

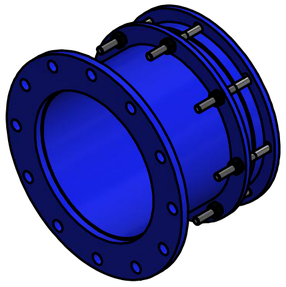

PowerSeal
PIPELINE PRODUCTS CORPORATION

MODEL 3528 Flanged Coupling Adapter
Steel pipe sizes 4" - 48"

SIZE	Wichita Falls, Texas	DWG NO	REV
DRAFTSMAN / DATE		SHEET 1 OF 1	